DESS

> DENTAL SMART SOLUTIONS

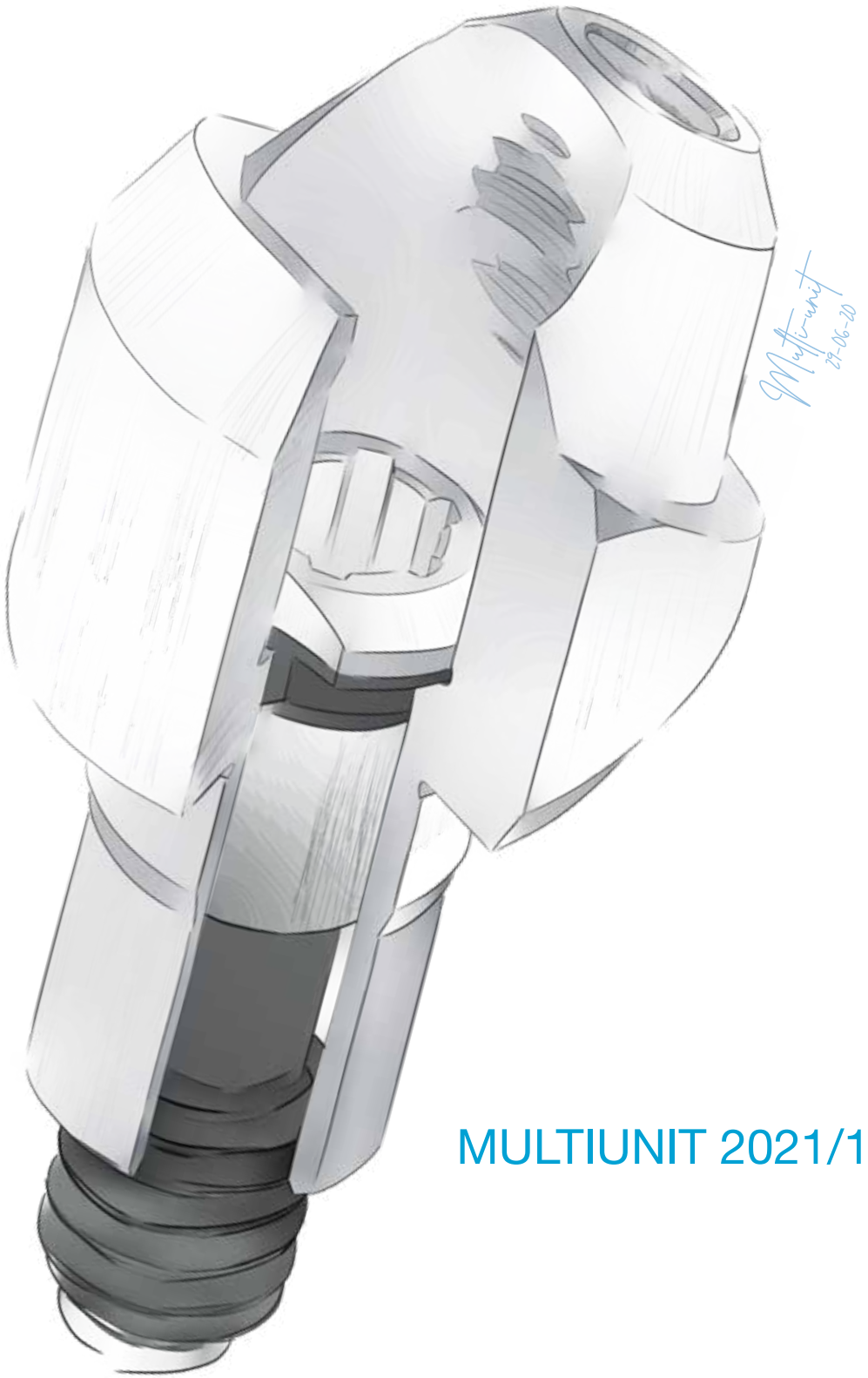

MULTIUNIT 2021/1

MULTIUNIT

When it comes to partial and full arch restorations, DESS® offers the most comprehensive range of transepithelial abutments, including UniAbutments, converter abutments and Multiunits. DESS® offers solutions for original implant systems, even when the solution is not available as standard in their range.

One key advantage of using the DESS® Multiunit range, is the standardization achieved with a unique prosthetic platform across the different implant compatibilities; this together with the standardized treatment protocol, achieves a higher rate of success, especially when it comes to cases with several different implant systems

Main advantages in the use of Multiunit abutments:

- Full-arch rehab with 4 to 6 implants
- Shorter treatment times
- Graftless procedure
- Correct insertion axis of the prothesis-implant connection
- Different gingival heights to allow adjusting for different implant depths

Free Multiunit and UniAbutment libraries on our website: www.dess-abutments.com.
These will allow you to freely design structures on most CAD/CAM systems.

Available compatibilities*:

NOBELACTIVE® & NOBELREPLACE® CC
ACTIVE HEX

NOBEL REPLACE SELECT™
TRI-LOBE

NOBELBRÅNEMARK®
EXTERNAL HEX
UNIVERSAL

3i OSSEOTITE®
EXTERNAL HEX USA

STRAUMANN® BONE LEVEL
CONICAL BL

STRAUMANN® BLX
CONICAL BLX

NEODENT GRAND MORSE®
NEO GM

ZIMMER SCREW-VENT®
INTERNAL HEX USA

ASTRA TECH IMPLANT SYSTEM™ EV
CONIC EVO

ASTRA TECH OSSEOSPEED™
INTERNAL HEX CONIC

OSSTEM® TS
CONIC OSS

BIOHORIZONS® INTERNAL
INTERNAL HEX BH

MIS® SEVEN
INTERNAL HEX MI

DENTIUM SUPERLINE™ & IMPLANTIUM®
CONIC DENT

(*) As of March 2021, please check with your local distributor for availability

Straight & Angled abutments

Designed with the precise DESS® connection, our Multiunit range has an optimal fit between the abutment and the implant connection.

Available in 14 compatibilities, different gingival heights, and a choice of 0º, 17º and 30º angulation, the DESS® range offers you the most complete range in the market.

Up to 5 different gingival heights to adapt to almost every clinical case

THE ULTIMATE MULTIUNIT

A full thread in the connection cone means a safer and more stable prothesis.

The vertical access of the screw facilitates placement, while allowing you to tighten to a maximum torque of 35Ncm* avoiding screw loosening and improving the stability of the Multiunit abutment.

*According to compatibility

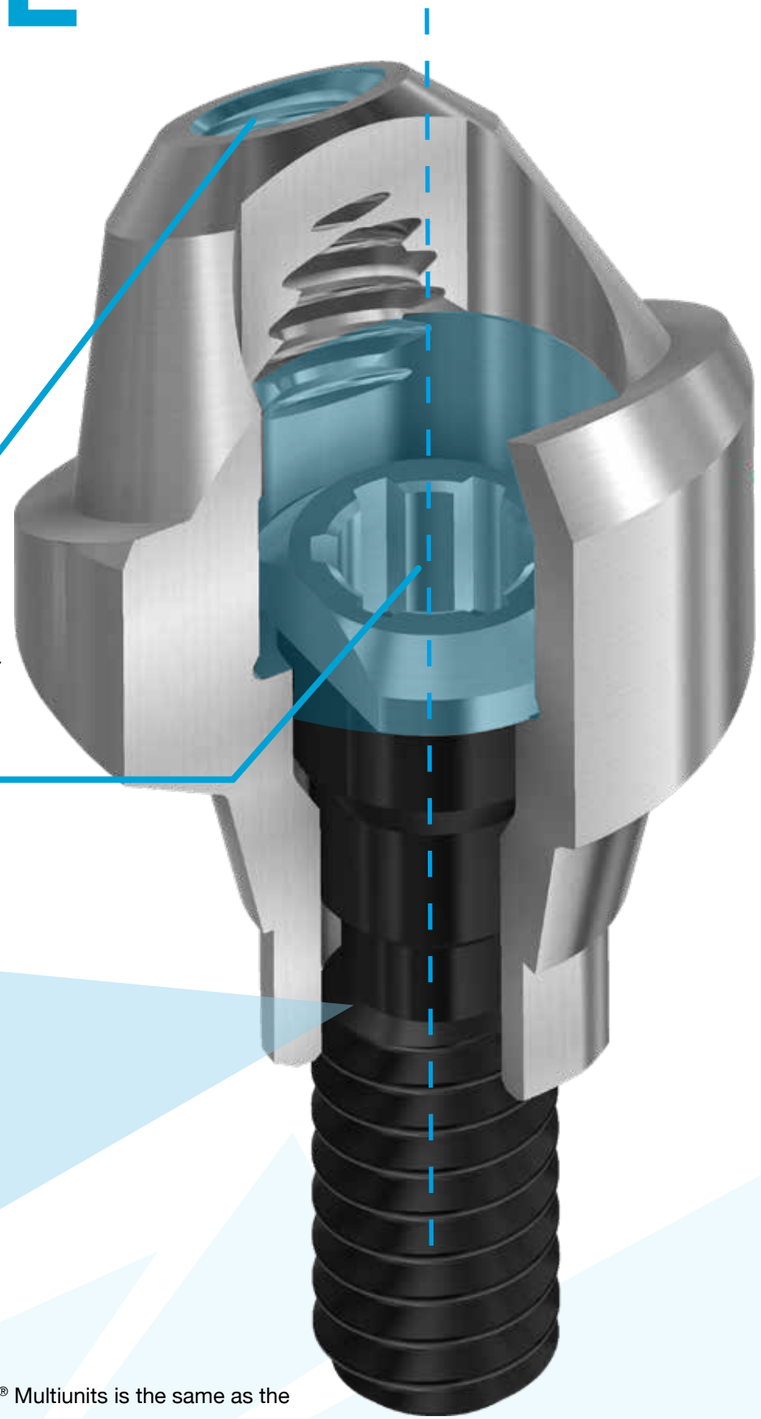

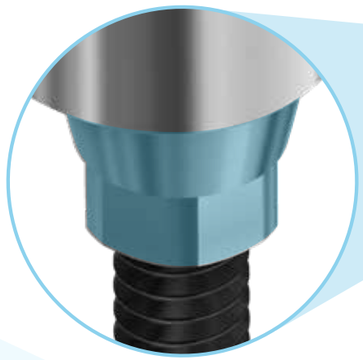

Full shaped connection provides more stability.

The top part of all DESS® Multiunits is the same as the Nobel System

Carriers

All our Multiunit abutments include a carrier, which will help you correctly place the abutment.

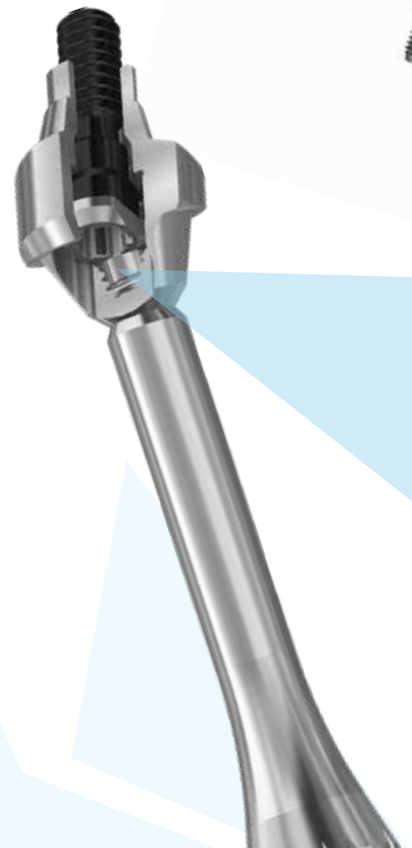

The angled Multiunit carrier has been specially designed to act as a contact point with the screw to prevent it from falling.

MULTIUNIT

Ti-Base for Multiunit

Available with two different shaft heights the DESS® Ti-Base allows you to choose according to the needs of your clinical case.

8mm 6mm

AURUMBase® for Multiunit

Our Angulated screw channel solution that gives you total angular freedom. Additional 25º entry with 360º rotation on its axis allows you to get the exact angle you need.

DESSLoc® for Multiunit

Transform a fixed prothesis into a removal overdenture with DESSLoc® for Multiunit.

CoCr Base for Multiunit

Manufactured with a micro melt Cobalt-Chrome alloy which has no internal tension, improving results

Scan Abutment for Multiunit

Available Desktop, on Tibase & Intraoral versions.

Special tool

Adjust to the recommended torque using the DESS® Multiunit tool attached to a torque wrench.

Place straight Multiunits by hand and snap the carrier out. Use the straight Multiunit tool (RP or WP) with a manual torque wrench to tighten the straight multiunit abutment according to the recommended torque shown in the table at the end of this document.

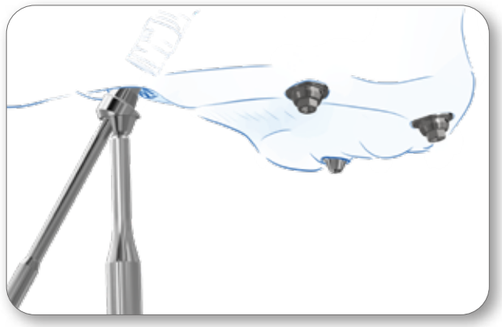

Place the angulated Multiunit and tighten the final screw, according to the recommended torque in the table at the end of this document, then unscrew the transporter.

Use the DESS® scan abutments, to work on your CAD/CAM System or take the impression with the DESS impression transfers for Multiunit (closed or open tray).

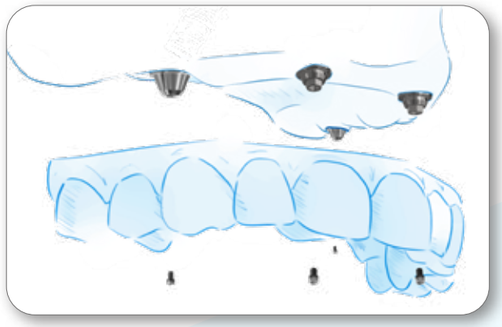

Insert fixed prothesis and tighten the prosthetic screws by alternating left and right side. Finally tighten the prosthetic screws at a maximum of **15Ncm**. Close the chimney with temporary material

The abutment screw is the same as the Nobel Multiunit screw

It is recommended to schedule a patient visit, 10 days after fitting the prothesis to check it and re-tighten the screw then close with composite.

MULTI-UNIT CONNECTION

● non-engaging

All abutments include final screw, except castables in packs of 10 and scan abutments for desktop scanning.

Screw UG

	IMPLANT PLATFORM RP (MULTI-UNIT PLATFORM 4.8)	IMPLANT PLATFORM WP (MULTI-UNIT PLATFORM 6.5)
	19.006	19.031
Pack of 10	19.006-P10	19.031-P10
with DLC-coating	19.206	19.231
TIN coated	19.606	19.631

Screw hex. 1,20mm	19.055[1]
Screw hex. 1,22mm	19.065[1]
Screw hex. 1,27mm	19.110[1]

Analogue

	14.007	14.047
Pack of 10	14.007-P10	14.047-P10

Our analogues are suitable for both 3D and traditional models.

Ti base

Shaft height		
● 6,0mm	15.007	15.054
● 6,0mm	15.007H120[1] *19.055*	
● 6,0mm	15.007H122[1] *19.065*	
● 6,0mm	15.007H127[1] *19.110*	
● 6,0mm	15.007TB[1] *19.306*	
● 8,0mm	15.007/8	

Ti base Castables

Pack of 5 ●	32.007-P5	32.054-P5

[1] Ideal to be used with systems where the implant screw matches this screw; avoiding changing screwdrivers while working

AURUMBase®

	IMPLANT PLATFORM RP (MULTI-UNIT PLATFORM 4.8)	IMPLANT PLATFORM WP (MULTI-UNIT PLATFORM 6.5)
●	36.007	36.054

Torx® Screw AURUMBase®

(replacement screw)

19.306	19.331

Torx® ball Screwdriver	20mm	24mm	30mm	35mm
	DT20TB06	DT24TB06	DT30TB06	DT35TB06

to use with AURUMBase® & ELLIPTIBase®

CoCr base

●	30.007	30.054
●	30.007H120 *19.055*	
●	30.007H122 *19.065*	
●	30.007H127 *19.110*	
●	30.007TB *19.306*	

for welding techniques

●	30.107

Castable

●	28.007	28.054
Pack of 10	11.007-P10	11.054-P10

Transfer

(Transfers includes open and close tray screw and transfer)

	IMPLANT PLATFORM RP MULTI-UNIT PLATFORM 4.8	IMPLANT PLATFORM WP MULTI-UNIT PLATFORM 6.5
	17.007	17.050

for closed tray only

5,0mm	17.507	
5,0mm Pack of 4	17.507-P4	
8,0mm	17.807	
8,0mm Pack of 4	17.807-P4	

Temporary abutments

●	24.007	24.030
●	24.007H120 *19.055*	
●	24.007H122 *19.065*	
●	24.007H127 *19.110*	
●	24.007TB *19.306*	

Healing abutments

●	20.100	20.054
●	20.100H120 *19.055*	
●	20.100H122 *19.065*	
●	20.100H127 *19.110*	
●	20.1007TB *19.306*	

DESSLoc®

88.007	

Scan abutments

for desktop scanning ** use indicated screw*	50.007 ** 19.006*	50.047 ** 19.031*
for intra-oral scanning	52.007	52.047
on Ti base	53.107	53.154
on AURUMBase	53.107	53.155

NobelActive® & NobelReplace® CC

Active Hex

			NP PURPLE 3.5 MULTI-UNIT PLATFORM 4.8	RP YELLOW 4.3/5.0 MULTI-UNIT PLATFORM 4.8
Straight		1,5mm ●	40.007/1	40.008/1
		2,5mm ●	40.007/2	40.008/2
		3,5mm ●	40.007/3	40.008/3
		4,5mm ●		40.008/4
Angled	17°	2,5mm ●	41.707/2	41.708/2
		3,5mm ●	41.707/3	41.708/3
	30°	3,5mm ●	43.007/3	43.008/3
		4,5mm ●	43.007/4	43.008/4

NobelReplace Select™

Tri-lobe

			RP YELLOW RP/4.3 MULTI-UNIT PLATFORM 4.8	WP BLUE WP/5.0 MULTI-UNIT PLATFORM 4.8	6.0 GREEN 6.0 MULTI-UNIT PLATFORM 6.5
Straight		1,0mm ●	40.004/1	40.005/1	40.006/1
		2,0mm ●	40.004/2	40.005/2	40.006/2
Angled		3,0mm ●	40.004/3	40.005/3	40.006/3
		4,0mm ●		40.005/4	
		5,0mm ●		40.005/5	
Angled	17°	2,0mm ◀	41.704/2	41.705/2	
		3,0mm ◀	41.704/3	41.705/3	
		4,0mm ◀		41.705/4	
	30°	4,0mm ◀		43.005/4	
		5,0mm ◀		43.005/5	

Nobel Brånemark®
External Hex Universal

			NP	RP	WP
			NP/3.5	RP/4.1	WP/5.1
			MULTI-UNIT PLATFORM 4.8		6.5
Straight		1,0mm	40.001/1	40.002/1	40.003/1
		2,0mm	40.001/2	40.002/2	40.003/2
		3,0mm	40.001/3	40.002/3	40.003/3
		4,0mm		40.002/4	
		5,0mm		40.002/5	
Angled	17°	2,0mm	41.701/2	41.702/2	
		3,0mm	41.701/3	41.702/3	
		4,0mm		41.702/4	
	30°	4,0mm		43.002/4	
		5,0mm		43.002/5	

3i Osseotite®
External Hex USA

			NP	RP
			PURPLE 3.4	BLUE 4.1
			MULTI-UNIT PLATFORM 4.8	
Straight		1,0mm	40.009/1	40.017/1
		2,0mm	40.009/2	40.017/2
		3,0mm	40.009/3	40.017/3
		4,0mm		40.017/4
		5,0mm		40.017/5
Angled	17°	2,0mm		41.712/2
		3,0mm		41.702/3*
		4,0mm		41.702/4*
	30°	3,0mm		43.012/3
		4,0mm		43.012/4
		5,0mm		43.012/5

Straumann® bone level
Conical BL

			NC	RC
			MULTI-UNIT PLATFORM 4.8	
Straight		1,5mm	40.043/1	40.044/1
		2,5mm	40.043/2	40.044/2
		3,5mm	40.043/3	40.044/3
		4,5mm		40.044/4
Angled	17°	2,5mm	41.743/2	41.744/2
		3,5mm	41.743/3	41.744/3
	30°	3,5mm	43.043/3	43.044/3
		4,5mm	43.043/4	43.044/4

Straumann® BLX
Conical BLX

			RB	WB
			MULTI-UNIT PLATFORM 4.8	
Straight		1,5mm	40.062/1	
		2,5mm	40.062/2	
		3,5mm	40.062/3	
Angled	17°	2,5mm	41.762/2	
		3,5mm	41.762/3	
	30°	2,5mm	43.062/3	
		3,5mm	43.062/4	

Neodent grand Morse®
Neo GM

Straight		1,5mm	40.035/1
		2,5mm	40.035/2
		3,5mm	40.035/3
Angled	17°	2,5mm	41.735/2
		3,5mm	41.735/3
	30°	3,5mm	43.035/3
		4,5mm	43.035/4

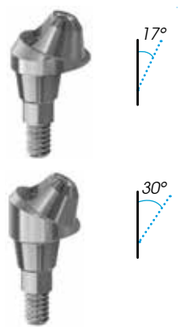

Zimmer Screw-vent®
Internal Hex USA

			NP GREEN 3.5	RP PURPLE 4.5
			MULTI-UNIT PLATFORM 4.8	
Straight		1,0mm	40.019/1	40.020/1
		2,0mm	40.019/2	40.020/2
		3,0mm	40.019/3	40.020/3
		4,0mm	40.019/4	
		5,0mm	40.019/5	
Angled	17°	2,5mm	41.719/2	41.720/2
		3,5mm	41.719/3	41.720/3
	30°	3,5mm	43.019/3	43.020/3
		4,5mm	43.019/4	43.020/4

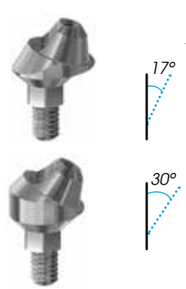

Astra Tech implant system™ EV
Conic EVO

			3.6	4.2	4.8
			MULTI-UNIT PLATFORM 4.8		
Straight		1,5mm	40.027/1	40.036/1	40.037/1
		2,5mm	40.027/2	40.036/2	40.037/2
		3,5mm	40.027/3	40.036/3	40.037/3
Angled	17°	3,5mm	41.727/3	41.736/3	41.737/3
		4,5mm	41.727/4	41.736/4	41.737/4
	30°	4,5mm	43.027/4	43.036/4	43.037/4
		5,5mm	43.027/5	43.036/5	43.037/5

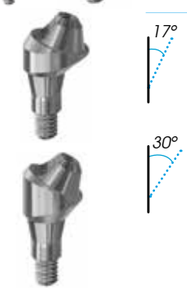

Astra Tech Osseospeed™
Internal Hex Conic

			RP AQUA 3.5-4.0	WP LILAC 4.5-5.0
			MULTI-UNIT PLATFORM 4.8	
Straight		1,5mm	40.024/1	40.025/1
		2,5mm	40.024/2	40.025/2
		3,5mm	40.024/3	40.025/3
Angled	17°	3,5mm	41.724/3	41.725/3
		4,5mm	41.724/4	41.725/4
	30°	4,5mm	43.024/4	43.025/4
		5,5mm	43.024/5	43.02/5

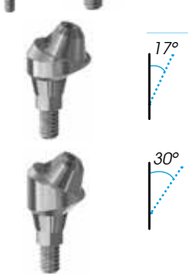

Osstem® TS
Conic OSS

			MINI	REGULAR
			MULTI-UNIT PLATFORM 4.8	
Straight		1,5mm	40.072/1	40.073/1
		2,5mm	40.072/2	40.073/2
		3,5mm	40.072/3	40.073/3
		4,5mm		
Angled	17°	2,5mm	41.772/2	41.773/2
		3,5mm	41.772/3	41.773/3
	30°	3,5mm	43.072/3	43.073/3
		4,5mm	43.072/4	43.073/4

BioHorizons® internal
Internal Hex BH

			NP	RP
			YELLOW 3.5	GREEN 4.5
			MULTI-UNIT PLATFORM 4.8	
Straight		1,0mm	40.019/1	40.020/1
		2,0mm	40.019/2	40.020/2
		3,0mm	40.019/3	40.020/3
		4,0mm	40.019/4	
		5,0mm	40.019/5	
	17°	2,5mm	41.719/2	
		3,5mm	41.719/3	
	30°	3,5mm	43.019/3	
		4,5mm	43.019/4	

MIS® Seven
Internal Hex MI

			SP	WP
			PURPLE 3.75-4.2	GREEN 5.0-6.0
			MULTI-UNIT PLATFORM 4.8	
Straight		1,0mm	40.019/1	40.020/1
		2,0mm	40.019/2	40.020/2
		3,0mm	40.019/3	40.020/3
		4,0mm	40.019/4	
		5,0mm	40.019/5	
Angled	17°	2,5mm	41.719/2	
		3,5mm	41.719/3	
	30°	3,5mm	43.019/3	
		4,5mm	43.019/4	

Dentium Superline™ & Implantium
Conic Dent

			YELLOW / RP / GREEN / BLUE / RED 3.6 3.8 4.0 4.5 5.0
Straight		1,5mm	40.090/1
		2,5mm	40.090/2
		3,5mm	40.090/3
Angled	17°	2,5mm	41.790/2
		3,5mm	41.790/3
	30°	2,5mm	43.090/2
		3,5mm	43.090/3

DESS® Multi-unit screws recommended torque

	PLATFORM	TORQUE (Ncm)
ACTIVE HEX NOBELACTIVE® & NOBELREPLACE® CC	3.5	35
	4.3	35
TRI-LOBE NOBEL REPLACE SELECT®	3.5	35
	4.3	35
	5.0	35
EXT HEX UNIVERSAL NOBELBRÅNEMARK®	3.5	35
	4.1	35
	5.1	35
EXT HEX USA 3i OSSEOTITE®	3.4	20
	4.1	20
CONICAL BL STRAUMANN® BONE LEVEL	3.3	35
	4.1	35
CONICAL BLX STRAUMANN® BLX	4.5	35
	5.7	35
NEO GM NEODENT GRAND MORSE®		20
INT HEX USA ZIMMER SCREW-VENT®	3.5	30
	4.5	30
CONIC EVO ASTRA TECH IMPLANT SYSTEM™ EV	3.6	25
	4.2	25
	4.8	25
INT HEX CONIC ASTRA TECH OSSEOSPEED™	3.5 - 4.0	20
	4.5 - 5.0	25
CONIC OSS OSSTEM® TS / HIOSSEN® ET	MINI	20
	REGULAR	30
INT HEX BH BIOHORIZONS® INTERNAL	3.5	30
	4.5	30
INT HEX MI MIS® SEVEN	STANDARD	25
	WIDE	25
CONIC DENT DENTIUM SUPERLINE™ IMPLANTIUM®	3.8/ 3.6/ 4.0/ 4.5/ 5.0	30

All DESS products are manufactured according to ISO 9001:2015 and ISO 13485:2016 with CE marking for all products Class IIb
All DESS® AURUMBase® screws and screwdrivers are based on the standard ISO 10664
3i® and 3i Certain®, Miniplant®, MicroMiniplant™ and Osseotite® are registered trademarks of 3i Implant Innovations, USA
ASTRA TECH™, OsseoSpeed™, ANKYLOS® C/X, XiVE®, FRIADENT®, ASTRATECH implant system™ EV and UniAbutment® are registered trademarks of DENTSPLY SIRONA Implants
BioHorizons® is a registered trademark of BioHorizons, INC.
Brånemark System®, NobelReplace® and Replace Select™, NobelActive™, NobelReplace® CC, NobelSpeedy™ and Multi-unit® are registered trademarks of Nobel Biocare AB, Sweden
ITI®, Straumann® and synOcta® are registered trademarks of Straumann Holding AG, Switzerland
MIS® is a registered trademark of MIS Implant Technologies Ltd.
Zimmer Screw-Vent® and SwissPlus® are registered trademarks of Zimmer Dental INC, USA
Dyna® is a registered trademark of Dyna Dental Engineering BV
Locator® is a registered trademark of ZEST IP Holdings
Camlog® and Conelog® are registered trademarks of CAMLOG Biotechnologies AG
Megagen® is a registered trademark of MEGAGEN IMPLANT CO. LTD
TORX® is a trademark of ACUMENT INTELLECTUAL PROPERTIES, LLC
Bego Semados® is a registered trademark of BEGO GmbH & Co. KG
Anthogyr® is a registered trademark of Anthogyr SAS
Medentis ICX® is a registered trademark of medentis medical GmbH
Osstem® is a registered trademark of OSSTEM IMPLANT CO. LTD
Dentium® is a trademark of Dentium Co. Ltd.
GOBALD® is a trademark of Global D SASU.
Biotech Kontact® is a trademark Biotech Dental SAS.
BTI® is a trademark BTI Biotechnology Institute.
PHIBO® is a trademark PHIBO Dental Solutions S.L.

DESS products can be used only by licensed dentists, physicians and labs.
Please refer ever to the instructions of use available on the website
www.dess-abutments.com
or supplied with the product.

Some products may not be available in your country. Some of the products are cleared for US and Canada.
Please contact your local distributor for more details.

CE 0051

DOC-EN-01-MUA